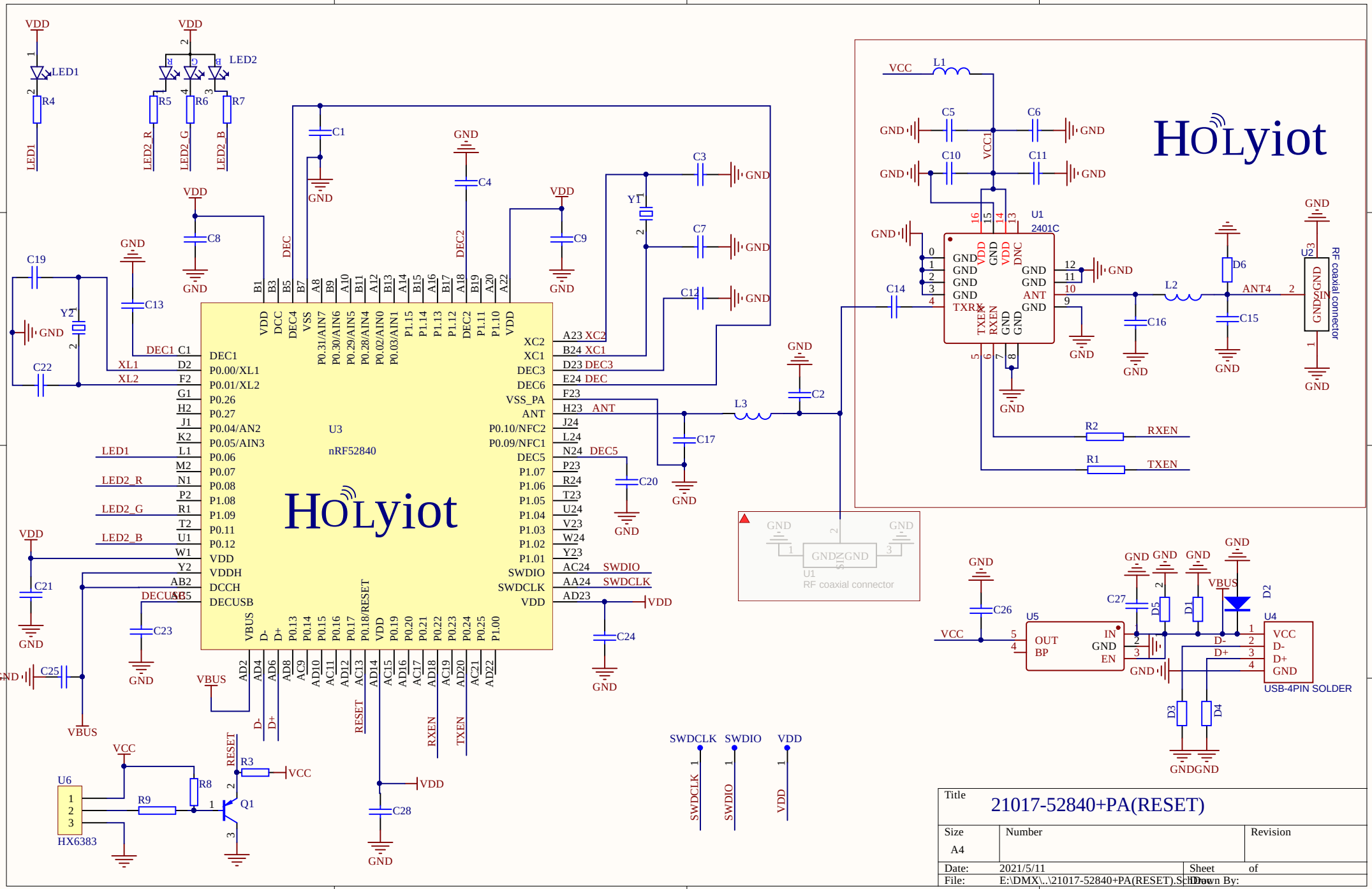
U3
nRF52840
U1
2401C
U4
USB-4PIN SOLDER
U5
U6
HX6383
RF coaxial connector
LED1
LED2
R4
R5
R6
R7
R8
R9
R3
Q1
R1
R2
L1
L2
L3
Y1
Y2
D1
D2
D3
D4
D5
D6
VDD
VCC
GND
VBUS
SWDCLK
SWDIO
RESET
RXEN
TXEN
ANT
XL1
XL2
DEC
DEC2
DEC5
DECUSB
D-
D+
Title
21017-52840+PA(RESET)
Size
A4
Number
Revision
Date: 2021/5/11
Sheet of
File: E:\DMX\..\21017-52840+PA(RESET).SchDoc
Drawn By: